# Optimization and Heat Integration in Simulation Models

Yang Chen
Ignacio Grossmann
David Miller

March 11-12, 2013

## Simulation-Based Optimization Framework

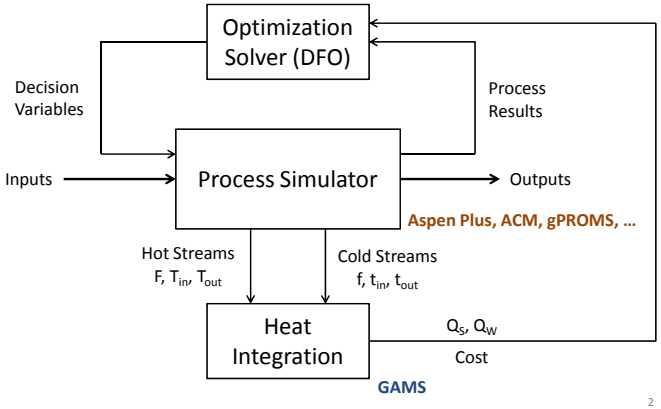


2

## Transshipment Model for Heat Integration

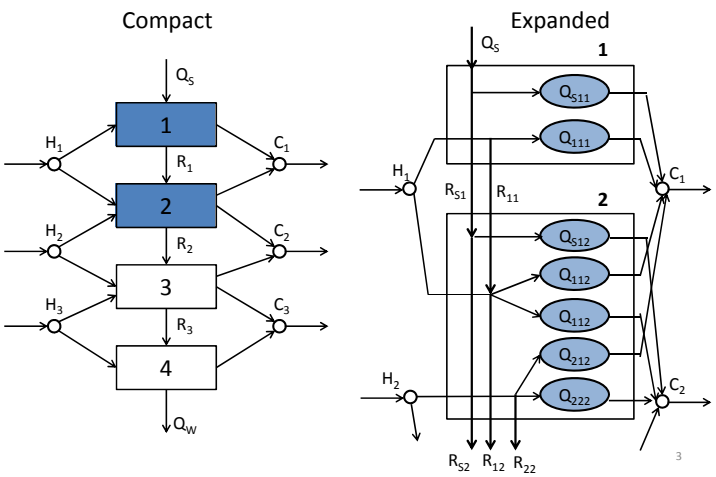


3

## Transshipment Model for Heat Integration

- For fixed process flow rates and temperatures (e.g., results of process simulators).
- Expanded transshipment model is selected due to its flexibility in modeling matches between individual process streams.

Extend to multiple utilities (HP, MP, LP steams, fuels, cooling water, refrigeration)

4

## Transshipment Model (LP Version)

- 1st Step: LP transshipment model
  - Minimum hot and cold utility consumption
  - Minimum utility cost

$$\min\ Z = \sum_{m\in S} c_m Q_m^S + \sum_{n\in W} c_n Q_n^W$$

$$\text{s.t.}\quad R_{ik} - R_{i,k-1} + \sum_{j\in C_k} Q_{ijk} + \sum_{n\in W_k} Q_{ink} = Q_{ik}^H \qquad i\in H_k'$$

$$R_{mk} - R_{m,k-1} + \sum_{j\in C_k} Q_{mjk} - Q_m^S = 0 \qquad m\in S_k'$$

$$\sum_{i\in H_k} Q_{ijk} + \sum_{m\in S_k} Q_{mjk} = Q_{jk}^C \qquad j\in C_k$$

$$\sum_{i\in H_k} Q_{ink} - Q_n^W = 0 \qquad n\in W_k \quad k=1,\ldots,K$$

$$R_{ik},\ R_{mk},\ Q_{ijk},\ Q_{mjk},\ Q_{ink},\ Q_m^S,\ Q_n^W \ge 0$$

$$R_{i0} = R_{iK} = 0$$

$Q^S$ heat load of hot utility
$Q^W$ heat load of cold utility
Q exchange of heat
R heat residual
c unit cost of utility
k temperature interval
i hot stream
j cold stream
m hot utility
n cold utility

5

## Transshipment Model (MILP Version)

- 2nd Step: MILP transshipment model
  - Matches between process streams and utilities
  - Minimum number of heat exchangers
  - Minimum capital cost for heat exchange network

$$\min \sum_{i\in H}\sum_{j\in C} y_{ij}^q$$

$$\text{s.t.}\quad R_{ik} - R_{i,k-1} + \sum_{j\in C_k} Q_{ijk} = Q_{ik}^H \qquad i\in H_k'$$

$$\sum_{i\in H_k} Q_{ijk} = Q_{jk}^C \qquad j\in C_k \qquad k=1,\ldots,K_q$$

$$\sum_{k=1}^{K_q} Q_{ijk} - U_{ij} y_{ij}^q \le 0$$

$$R_{ik},\ Q_{ijk} \ge 0$$

y stream match
Q exchange of heat
R heat residual
U upper bound of heat load
q subnetwork
k temperature interval
i hot stream
j cold stream

6

## Issues for Cooling Water

- The objective of LP transshipment model

$$\min\ Z = \sum_{m\in S} c_m Q_m^S + \sum_{n\in W} c_n Q_n^W$$

- Inlet and outlet temperatures of cooling water are specified.

$$Q_n^W = F_n^W Cp_n^W \left(T_{out,n}^W - T_{in,n}^W\right)$$

- Actual outlet temperature of cooling water may be lower than the specified value, then the unit cost of cooling water will increase.

$$c_n \sim \frac{1}{T_{out,n}^W - T_{in,n}^W}$$

- Two ways to solve this issue:
  - Calculate the actual outlet temperature of cooling water after optimization; if it is lower than specified value, increase the unit cost of cooling water, and then re-solve the problem.
  - Consider multiple cooling water with different outlet temperatures and different unit costs.

7

## Case Study Problems – Similar Flows (FCp)

| | Hot Streams | | | | Cold Streams | | |
|---|---|---|---|---|---|---|---|
| | FCp (MW/°C) | Tin (°C) | Tout (°C) | | FCp (MW/°C) | Tin (°C) | Tout (°C) |
| 1 | 1 | 400 | 120 | 1 | 1.5 | 160 | 400 |
| 2 | 2 | 340 | 120 | 2 | 1.3 | 100 | 250 |
| 3 | 1.5 | 380 | 150 | 3 | 2.5 | 50 | 300 |
| 4 | 2.5 | 300 | 100 | 4 | 2.8 | 200 | 380 |
| 5 | 1.7 | 420 | 160 | 5 | 1.9 | 150 | 450 |
| 6 | 0.8 | 390 | 110 | 6 | 0.8 | 100 | 180 |
| 7 | 1.2 | 360 | 200 | 7 | 1.7 | 200 | 350 |
| 8 | 1.8 | 280 | 130 | 8 | 1.6 | 120 | 330 |
| 9 | 1.1 | 250 | 80 | 9 | 0.9 | 110 | 220 |
| 10 | 1.3 | 330 | 170 | 10 | 2.1 | 190 | 360 |
| 11 | 2.1 | 430 | 300 | 11 | 1.8 | 260 | 420 |
| 12 | 2.2 | 200 | 100 | 12 | 1.2 | 80 | 180 |
| 13 | 1.2 | 150 | 70 | 13 | 1.6 | 130 | 390 |
| 14 | 1.6 | 330 | 180 | 14 | 1.4 | 180 | 260 |
| 15 | 1.9 | 370 | 115 | 15 | 2 | 155 | 365 |
| 16 | 1.4 | 355 | 105 | 16 | 1 | 95 | 480 |
| 17 | 0.9 | 310 | 130 | 17 | 1.1 | 175 | 385 |
| 18 | 1.3 | 260 | 90 | 18 | 1.5 | 130 | 290 |
| 19 | 1.1 | 300 | 115 | 19 | 2.2 | 210 | 430 |
| 20 | 2.3 | 265 | 190 | 20 | 1.7 | 230 | 370 |

**Steam**: HP 500°C, MP 350°C

**Cooling Water**: 20 - 50°C

8

## Case Study Results – Similar Flows (FCp)

| Problem Size | LP Transshipment Model | | | | MILP Transshipment Model | | | |
|---|---|---|---|---|---|---|---|---|
| # of Hot Streams * # of Cold Stream | # of Continuous Variables | QS (MW) | QW (MW) | CPU Time (seconds) | # of Continuous Variables | # of Binary Variables | Minimum Matches | CPU Time (seconds) |
| 2 * 2 | 38 | 45 | 210 | 0.031 | 38 | 10 | 8 | 0.156 |
| 3 * 3 | 72 | 115 | 0 | 0.031 | 72 | 17 | 8 | 0.047 |
| 5 * 5 | 235 | 307 | 60 | 0.031 | 235 | 67 | 24 | 0.421 |
| 10 * 10 | 1057 | 474 | 197 | 0.031 | 1057 | 219 | 42 | 1059.309 |
| 15 * 15 | 2692 | 711 | 391.5 | 0.031 | 2692 | 421 | (57) | ------ |
| 20 * 20 | 6284 | 1473 | 684.5 | 0.031 | 6284 | 778 | (83) | ------ |

------ : global optimal solution was not obtained within 100,000 seconds.

9

## Case Study Problems – Dissimilar Flows (FCp)

| | Hot Streams | | | | Cold Streams | | |
|---|---|---|---|---|---|---|---|
| | FCp (MW/°C) | Tin (°C) | Tout (°C) | | FCp (MW/°C) | Tin (°C) | Tout (°C) |
| 1 | 6 | 400 | 120 | 1 | 14 | 160 | 400 |
| 2 | 2 | 340 | 120 | 2 | 3 | 100 | 250 |
| 3 | 0.5 | 380 | 150 | 3 | 0.4 | 50 | 300 |
| 4 | 8 | 300 | 100 | 4 | 2.5 | 200 | 380 |
| 5 | 3 | 420 | 160 | 5 | 2 | 150 | 450 |
| 6 | 4 | 390 | 110 | 6 | 6 | 100 | 180 |
| 7 | 0.2 | 360 | 200 | 7 | 1.5 | 200 | 350 |
| 8 | 0.6 | 280 | 130 | 8 | 0.2 | 120 | 330 |
| 9 | 1.5 | 250 | 80 | 9 | 5.5 | 110 | 220 |
| 10 | 4 | 330 | 170 | 10 | 3 | 190 | 360 |
| 11 | 12 | 430 | 300 | 11 | 8 | 260 | 420 |
| 12 | 8 | 200 | 100 | 12 | 12 | 80 | 180 |
| 13 | 5 | 150 | 70 | 13 | 0.3 | 130 | 390 |
| 14 | 0.6 | 330 | 180 | 14 | 4.5 | 180 | 260 |
| 15 | 0.3 | 370 | 115 | 15 | 1 | 155 | 365 |
| 16 | 6 | 355 | 105 | 16 | 0.1 | 95 | 480 |
| 17 | 0.9 | 310 | 130 | 17 | 7 | 175 | 385 |
| 18 | 3 | 260 | 90 | 18 | 2 | 130 | 290 |
| 19 | 1 | 300 | 115 | 19 | 0.5 | 210 | 430 |
| 20 | 0.3 | 265 | 190 | 20 | 1.7 | 230 | 370 |

**Steam**: HP 500°C, MP 350°C

**Cooling Water**: 20 - 50°C

10

## Case Study Results – Dissimilar Flows (FCp)

| Problem Size | LP Transshipment Model | | | | MILP Transshipment Model | | | |
|---|---|---|---|---|---|---|---|---|
| # of Hot Streams * # of Cold Stream | # of Continuous Variables | QS (MW) | QW (MW) | CPU Time (seconds) | # of Continuous Variables | # of Binary Variables | Minimum Matches | CPU Time (seconds) |
| 2 * 2 | 38 | 1910 | 220 | 0.047 | 38 | 12 | 9 | 0.187 |
| 3 * 3 | 72 | 1861 | 186 | 0.031 | 72 | 24 | 14 | 0.189 |
| 5 * 5 | 235 | 1105 | 760 | 0.031 | 235 | 67 | 26 | 0.311 |
| 10 * 10 | 1057 | 825 | 755 | 0.047 | 1057 | 196 | 39 | 23.104 |
| 15 * 15 | 2692 | 786 | 514.5 | 0.016 | 2692 | 392 | 55 | 760.583 |
| 20 * 20 | 6284 | 1351.5 | 1283 | 0.031 | 6284 | 712 | (81) | ------ |

------ : global optimal solution was not obtained within 100,000 seconds.

11

## Next Step: Link Heat Integration Tool to Simulators

- Link the heat integration tool (GAMS model) to process simulators (including ACM and Aspen plus) and optimization solver through Python or C-based programs.
- Test some simple ACM models at first.
- Initial demonstration: solid sorbent absorber/regenerator ACM model for $CO_2$ capture
- Apply LP transshipment model first, then MILP model in the next step if necessary.

12

# Future Work: Variable FCp

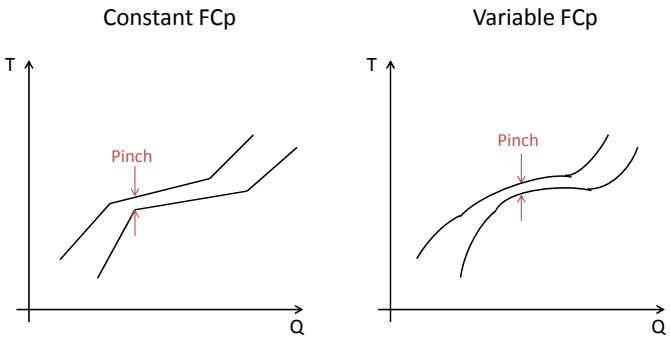


Piecewise linear approximation for composite curves under Variable FCp.

13

# Future Work: Simultaneous Optimization

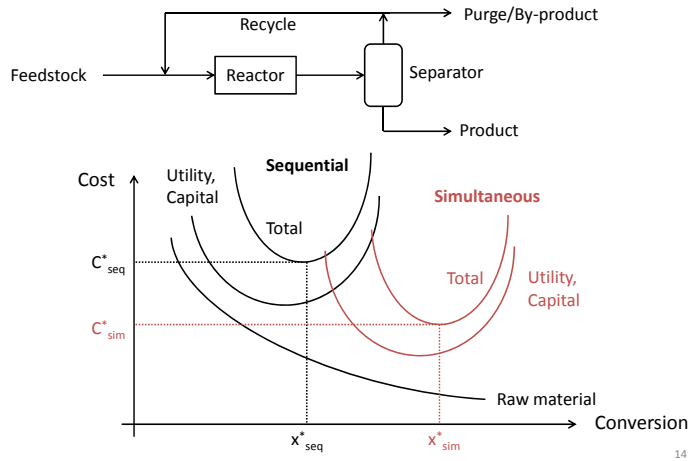


14

# Disclaimer

This presentation was prepared as an account of work sponsored by an agency of the United States Government under the Department of Energy. Neither the United States Government nor any agency thereof, nor any of their employees, makes any warranty, express or implied, or assumes any legal liability or responsibility for the accuracy, completeness, or usefulness of any information, apparatus, product, or process disclosed, or represents that its use would not infringe privately owned rights. Reference herein to any specific commercial product, process, or service by trade name, trademark, manufacturer, or otherwise does not necessarily constitute or imply its endorsement, recommendation, or favoring by the United States Government or any agency thereof. The views and opinions of authors expressed herein do not necessarily state or reflect those of the United States Government or any agency thereof.

15